Hive Assembly - Floor

National, Langstroth, Dadant, Smith, Commercial

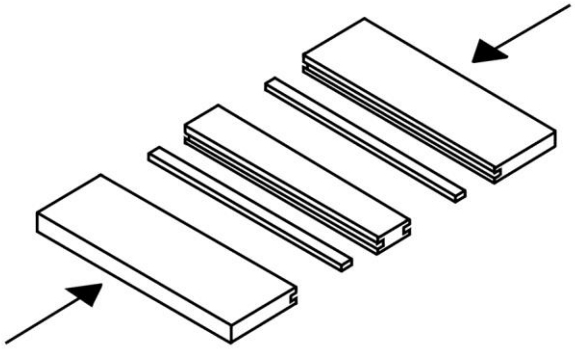

1. Push floorboards and tongues together inside the joists, starting at the back of the floor. (Joists have rebates at front of the floor for entrance block) When assembling a floor with an alighting board, you will find either an additional or wider centre board. NOTE: Floors can be made up of differing numbers of boards.

2. Nail boards in position through the joists, using 2" nails.

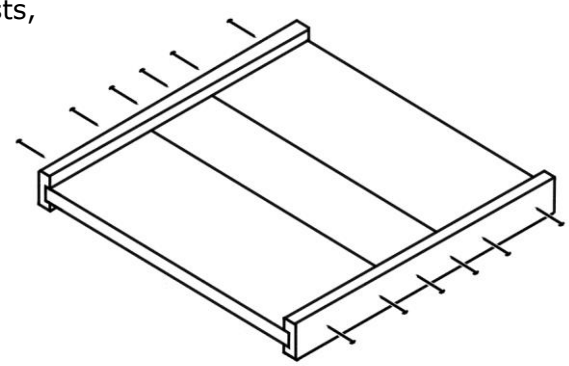

Check regularly that the floor is square

Use a waterproof PVA glue when assembling

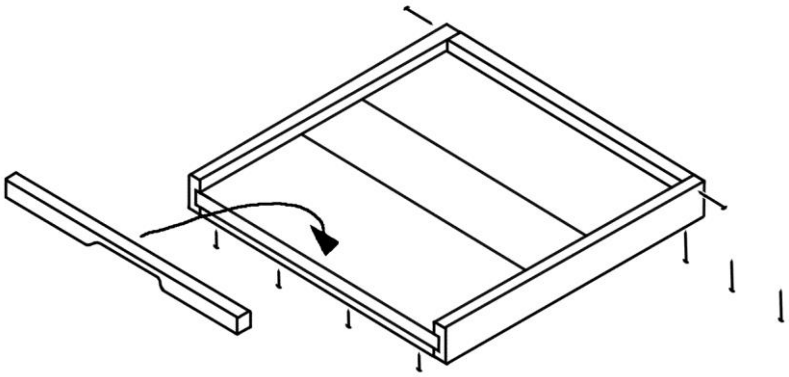

sition the back lath on top of the floor, and between joists and nail from below ides, using 1.5" nails.

4. Position the 3/8" front lath underneath floor, below entrance block, flush at the front and nail from the underside using 1" nails. This lath enables the floor to be reversed and used with a very narrow entrance.

5. Position entrance block on top of floor between rebates. Do not nail or glue in position.

https://youtu.be/9ofdjCfZvd4 - youtube video showing how to assemble a solid floor

THORNE

E.H. THORNE (*Beehives*) LTD

Beehive Business Park, Rand, Nr. Wragby, Lincolnshire LN8 5NJ

Tel. 01673 858555

sales@thorne.co.uk www.thorne.co.uk